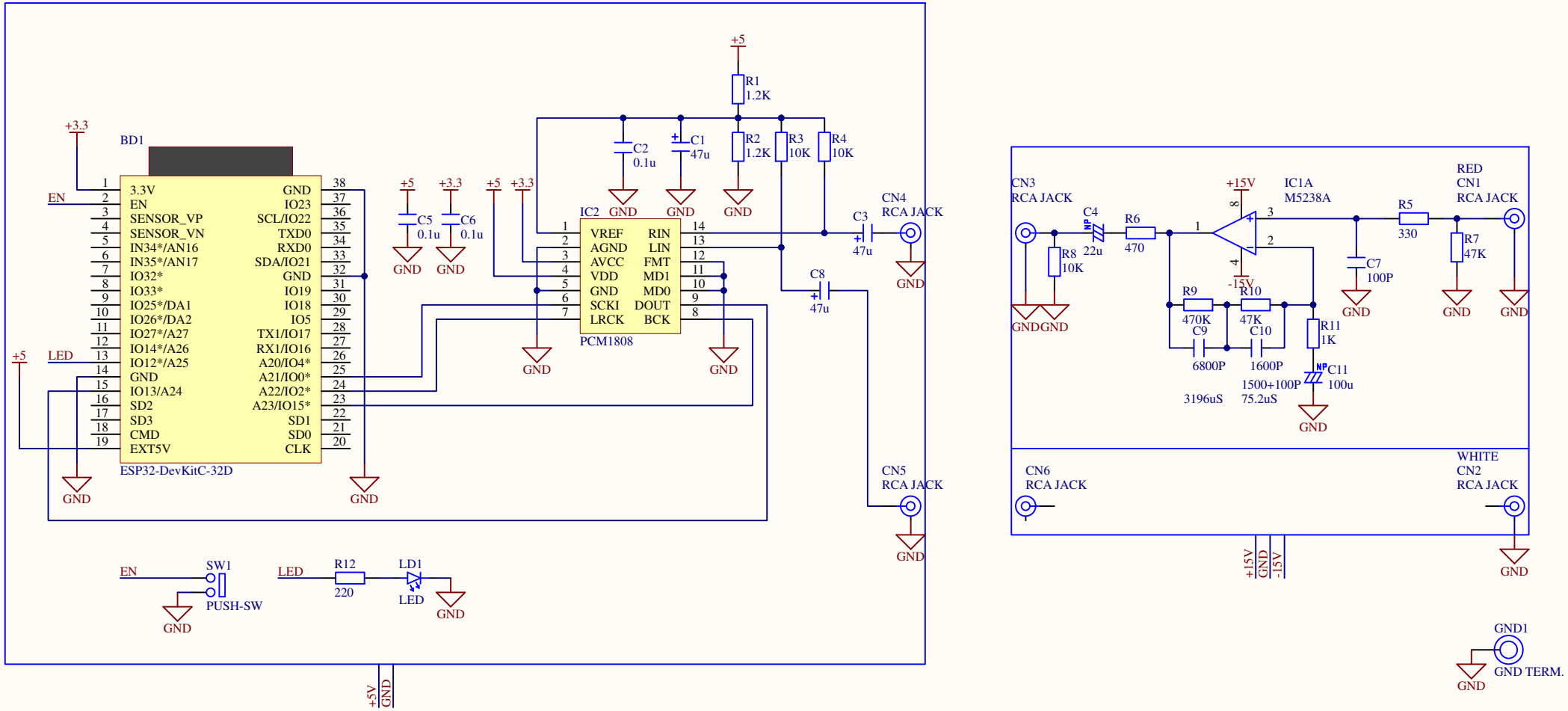
BD1
ESP32-DevKitC-32D
3.3V
EN
SENSOR_VP
SENSOR_VN
IN34*/AN16
IN35*/AN17
IO32*
IO33*
IO25*/DA1
IO26*/DA2
IO27*/A27
IO14*/A26
IO12*/A25
GND
IO13/A24
SD2
SD3
CMD
EXT5V
GND
IO23
SCL/IO22
TXD0
RXD0
SDA/IO21
GND
IO19
IO18
IO5
TX1/IO17
RX1/IO16
A20/IO4*
A21/IO0*
A22/IO2*
A23/IO15*
SD1
SD0
CLK
IC2
PCM1808
VREF
AGND
AVCC
VDD
GND
SCKI
LRCK
RIN
LIN
FMT
MD1
MD0
DOUT
BCK
R1 1.2K
R2 1.2K
R3 10K
R4 10K
C1 47u
C2 0.1u
C3 47u
C4 22u
C5 0.1u
C6 0.1u
C7 100P
C8 47u
C9 6800P
C10 1600P
C11 100u
R5 330
R6 470
R7 47K
R8 10K
R9 470K
R10 47K
R11 1K
R12 220
LD1 LED
SW1 PUSH-SW
CN3 RCA JACK
CN4 RCA JACK
CN5 RCA JACK
CN6 RCA JACK
RED CN1 RCA JACK
WHITE CN2 RCA JACK
IC1A M5238A
+15V
-15V
3196uS
75.2uS
1500+100P
GND1
GND TERM.
+5V
GND